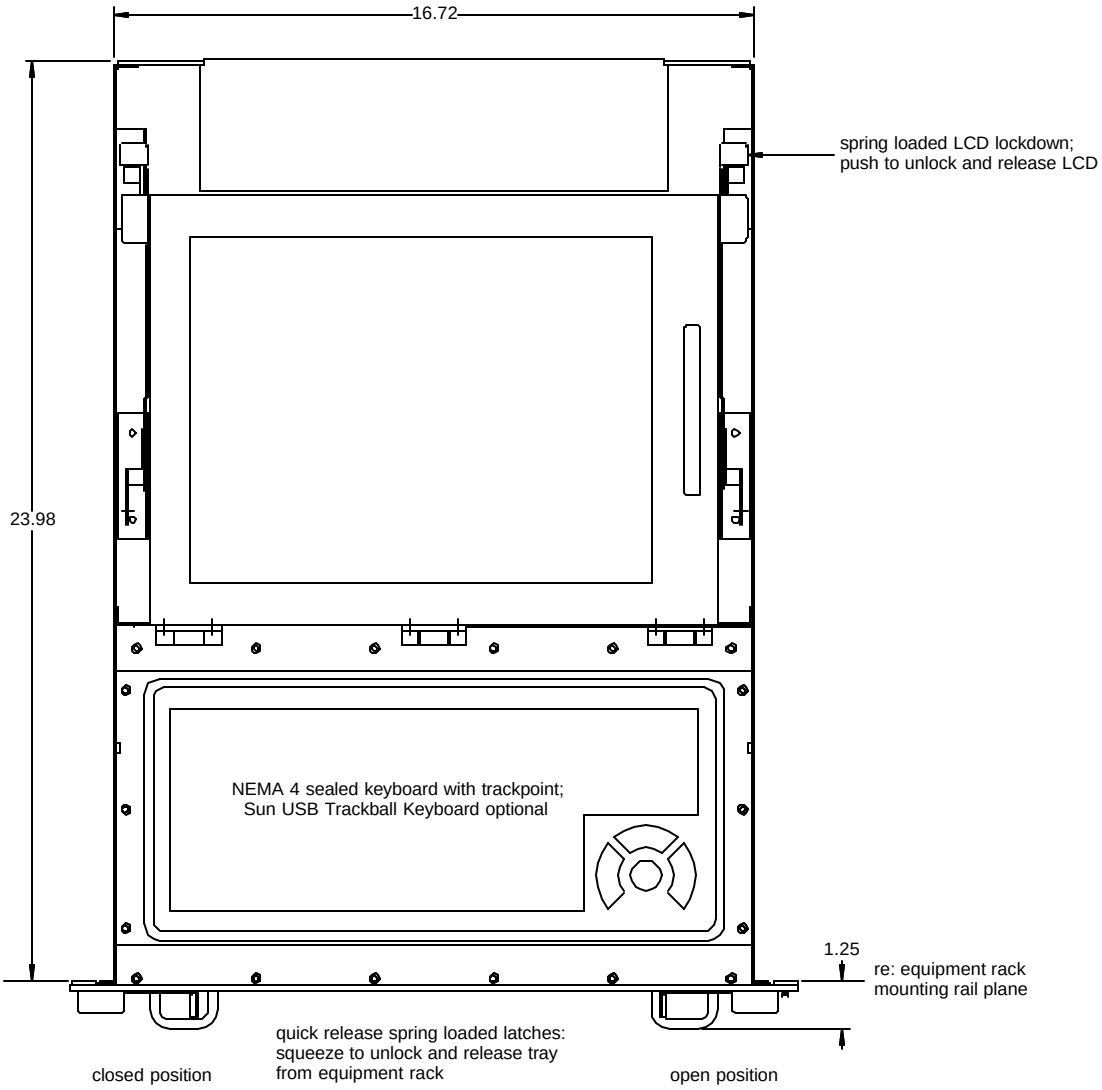

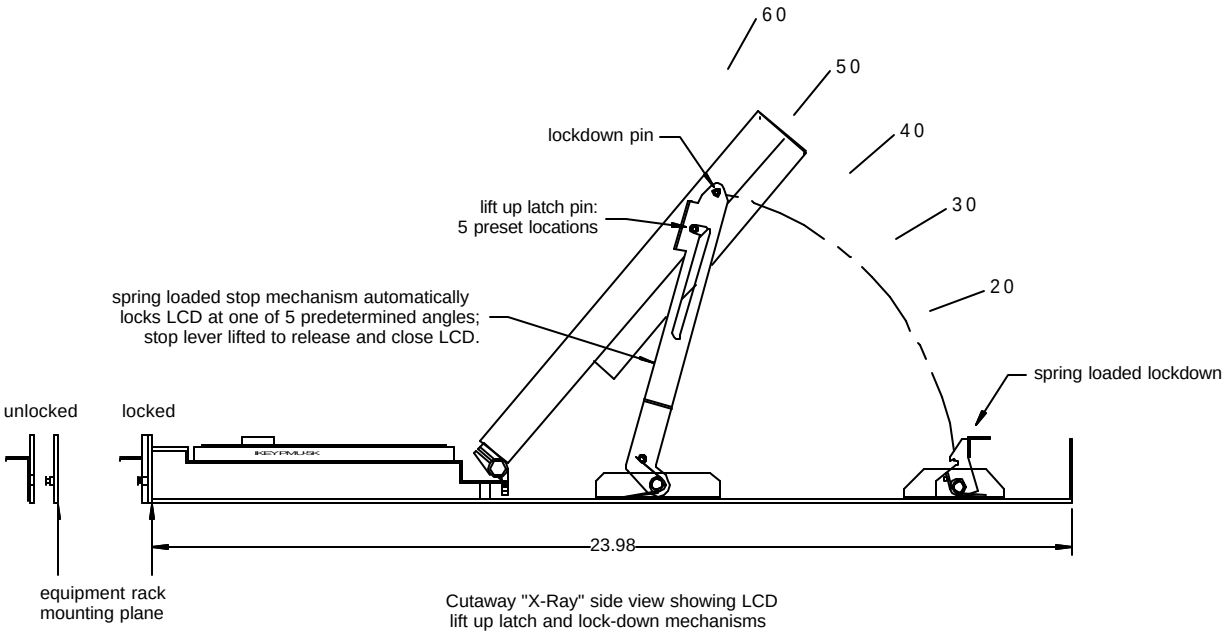

Cutaway "X-Ray" side view showing LCD
lift up latch and lock-down mechanisms