THE INFORMATION CONTAINED IN THIS DRAWING IS THE SOLE PROPERTY OF NEUROLOGIC SYSTEMS ANY REPRODUCTION IN PART OR WHOLE WITHOUT THE WRITTEN PERMISSION OF NEUROLOGIC SYSTEMS IS PROHIBITED.

REVISIONS

REV.	DESCRIPTION	DATE	APPROVED
A	INITIAL RELEASE	XX/XX/XX	XXXX

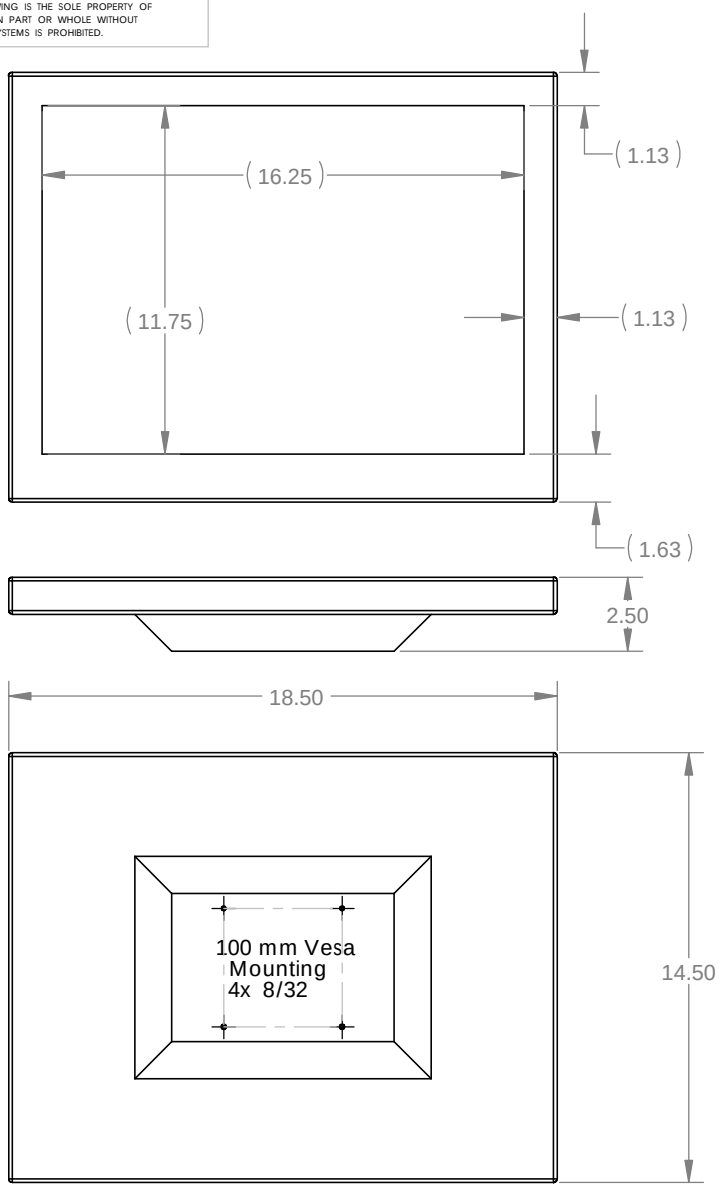

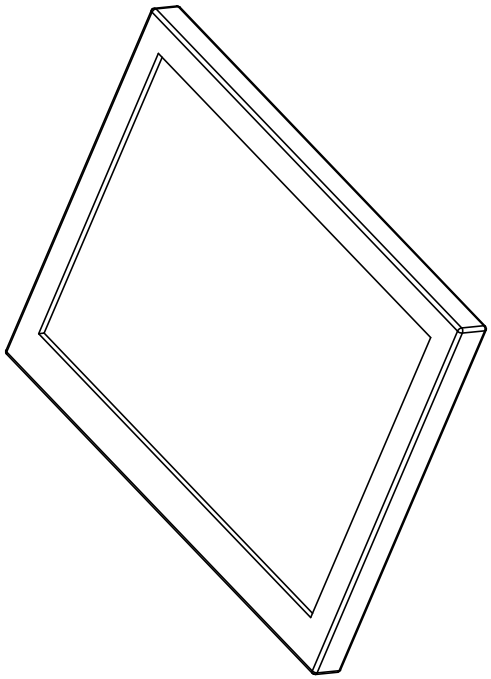

ITEM NO.	PART OR IDENTIFYING NO.	NOMENCLATURE OR DESCRIPTION	MATERIAL SPECIFICATION	QTY REQD

PARTS LIST

UNLESS OTHERWISE SPECIFIED DIMENSIONS ARE IN INCHES
TOLERANCES ARE:
FRACTIONS ± DECIMALS .XX± .XX ± .XXX±.XXX ANGLES ± 1

MATERIAL --

FINISH --

DO NOT SCALE DRAWING

CAD GENERATED DRAWING, DO NOT MANUALLY UPDATE

APPROVALS		DATE
DRAWN	MIKE TREJO	07/18/01
CHECKED	- -	
RESP ENG	- -	
MFG ENG	- -	
QUAL ENG	- -	

XXX-XX-XXXX	XXX-XX-XXXX
NEXT ASSY	USED ON
APPLICATION	

Neuro Logic Systems
Interactive Touch and Display Systems

20" LCD TV MONITOR
CF20TV_000

SIZE B | DWG. NO. CF20TV_000 | REV. A
SCALE | CAD FILE: CF20TV_000 | SHEET 1 OF 1